Hygienespülung

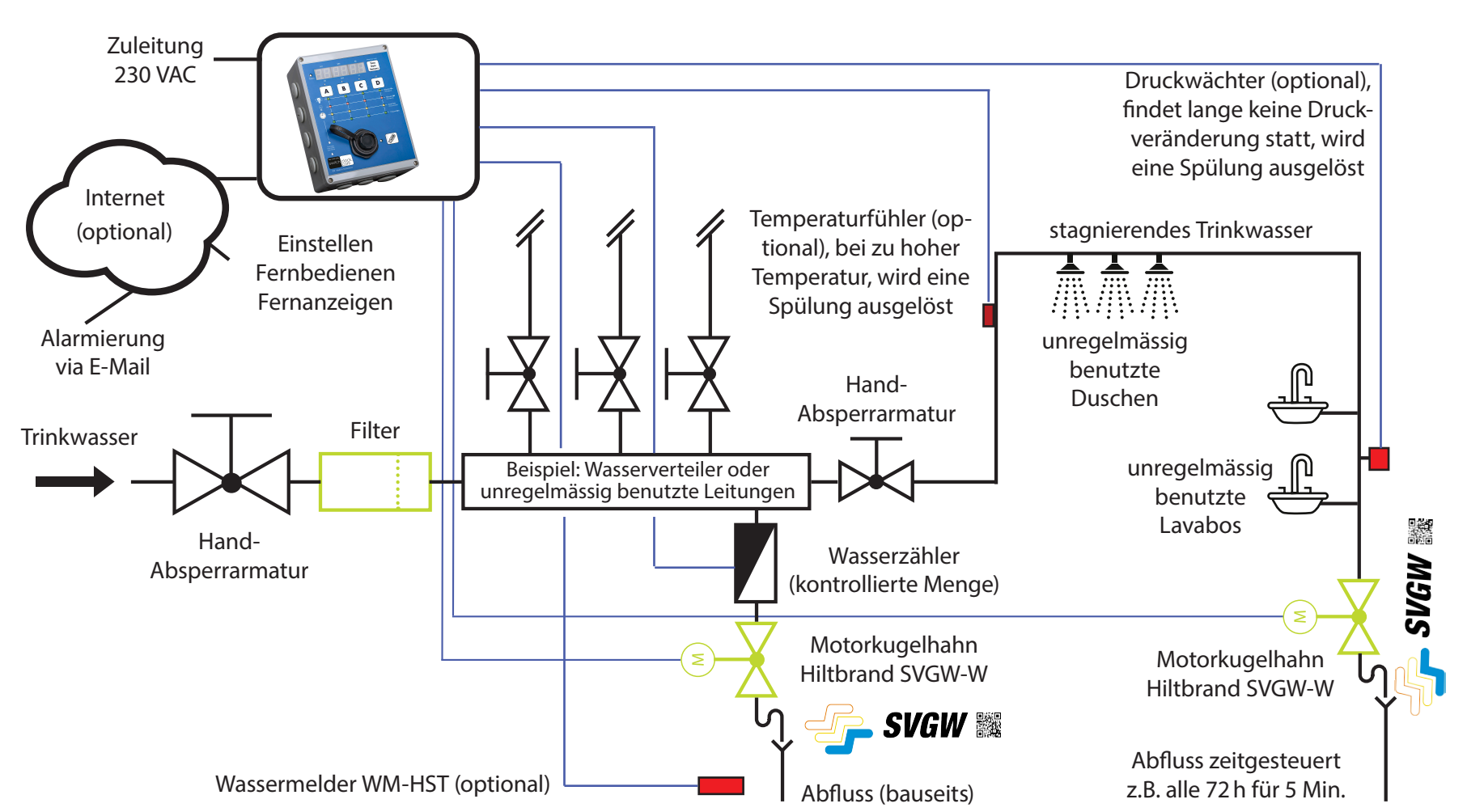

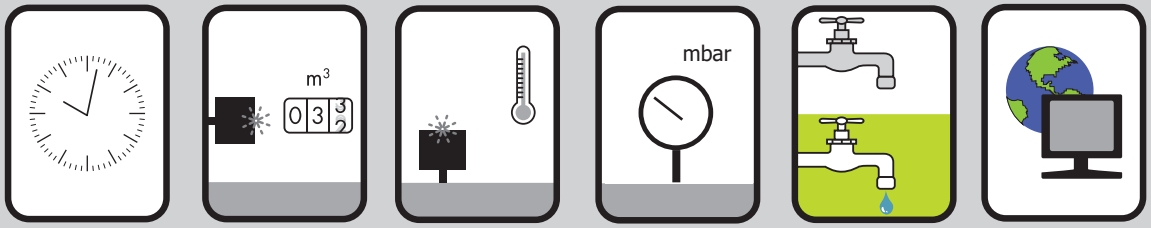

time switch today switch clock.com hilbrand